LONDON BASIN CO.

JASPER WALL-MOUNTED TAP

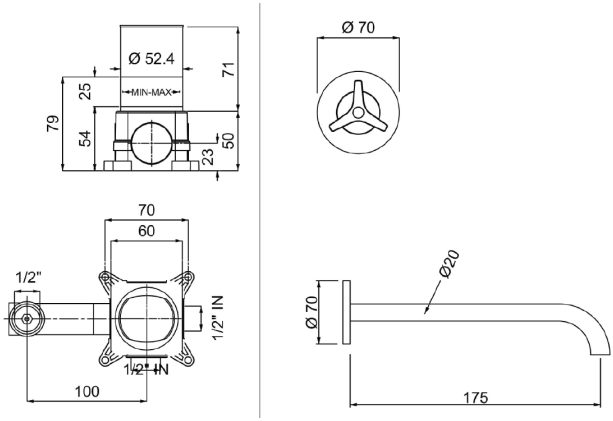

Technical Characteristics

Material: Brass
Finishes: Brushed chrome plated
Flow Rate: 6 l/min.

Product Characteristics

The materials used in the construction of this product have been carefully chosen to fulfill the intended function.

Cleaning

For correct cleaning of the tap, wash it only with solvent-free soaps. absolutely avoid the use of detergents containing corrosive or acid substances (hydrochloric, acetic, phosphoric acid), abrasive sponges and swabs with metal wires, we recommend the use of a detergent with a neutral PH.

Quality

All LONDON BASIN COMPANY LTD products are 100% checked during the packaging process, ensuring their tightness and functionality.

Accessories

Replacement accessories are not included with this product.

Components

Ceramic Headworks:
- Recommended working pressure: 1-5 bar
- Recommended temperature: < = 90ºC
- Life Cycle: > 200.000
- Ceramic: AL2 03

Aerator: M20X1