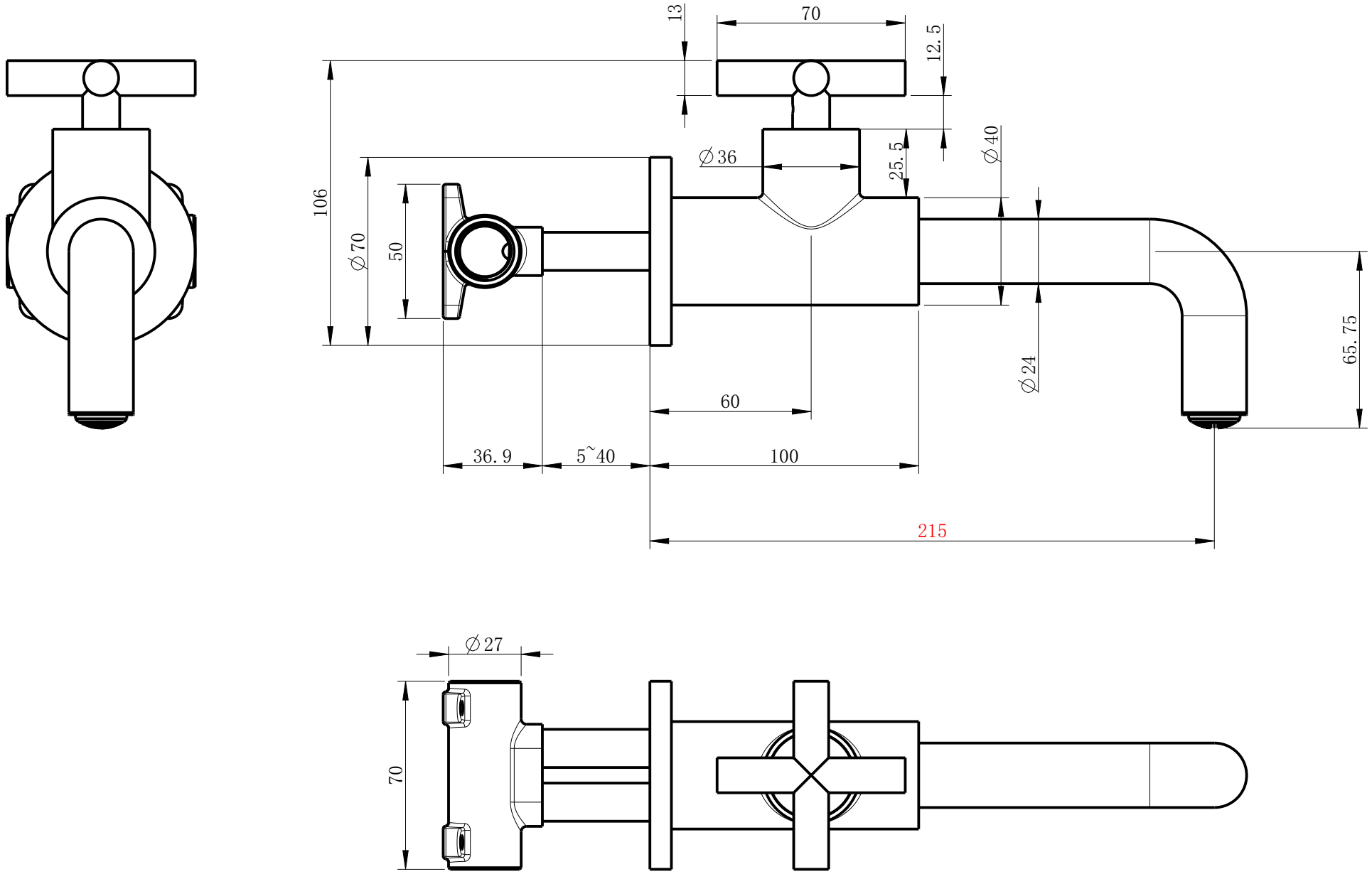
13
70
12.5
106
∅36
25.5
∅40
∅70
50
∅24
65.75
60
36.9
5~40
100
215
∅27
70